June - 2015

ASG ACCURATE SCREEN + GRATING

# Channel Grating Catalogue

# DIAMOND CHANNEL GRATING

## 2 Diamond

**4-3/4"**

**(120mm) Wide**



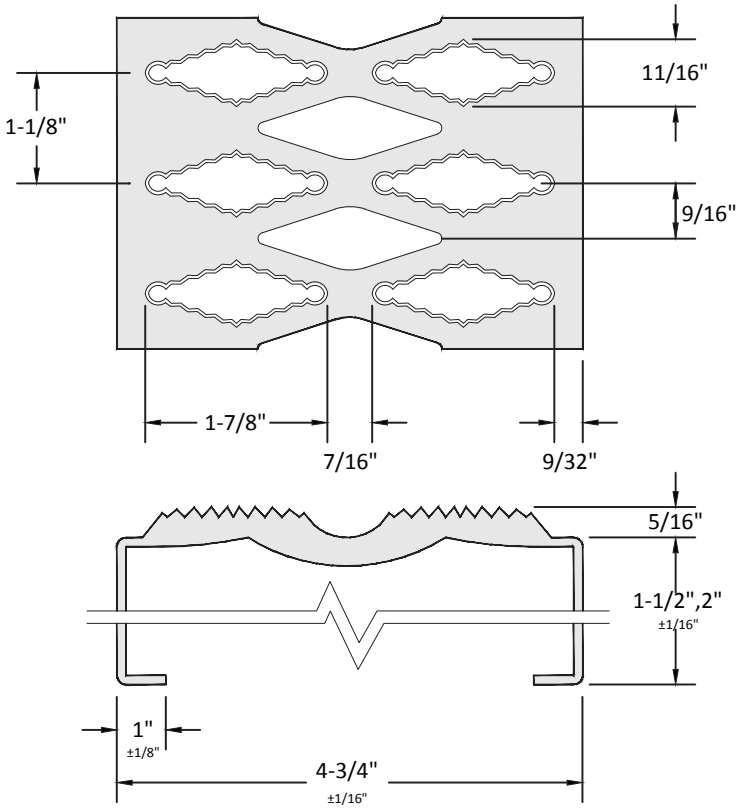


**ACCEPTABLE LOADING FOR CLEAR SPAN: UNIFORM/CONCENTRATED (LBS)**

| WIDTH | DEPTH | ALLOY | GAUGE | 24" SPAN | 36"SPAN | 48"SPAN | 60"SPAN | 72"SPAN |
|---|---|---|---|---|---|---|---|---|
| 4-3/4" | 1.5" | Galv./Steel | 14ga | 1516/600 | 674/400 | 379/300 | 243/240 NR | 168/200 NR |
| | | | 12ga | 1790/708 | 798/474 | 451/357 | 290/287 | 203/241 NR |
| | 2.0" | Galv./Steel | 14ga | 2236/885 | 994/590 | 559/443 | 358/354 | 248/295 |
| | | | 12ga | 2255/892 | 1005/597 | 567/449 | 365/361 | 255/303 |
| | | Alum. | 0.080" | 1398/553 | 622/369 | 350/277 | 225/222 NR | 156/186 NR |
| | | | 0.125" | 2331/978 | 1097/651 | 617/489 | 395/390 | 275/326 |
| | | 304ss | 14ga | 1730/685 | 772/458 | 436/345 | 281/278 | 196/233 |
| | | 316ss | 14ga | 1730/685 | 772/458 | 436/345 | 281/278 | 196/233 |

**NR** = Not Recommended

Loads and deflections are theoretical and based on static loading.

NAAMM MEMBER

# DIAMOND CHANNEL GRATING

3 Diamond

**7"**

**(178mm) Wide**



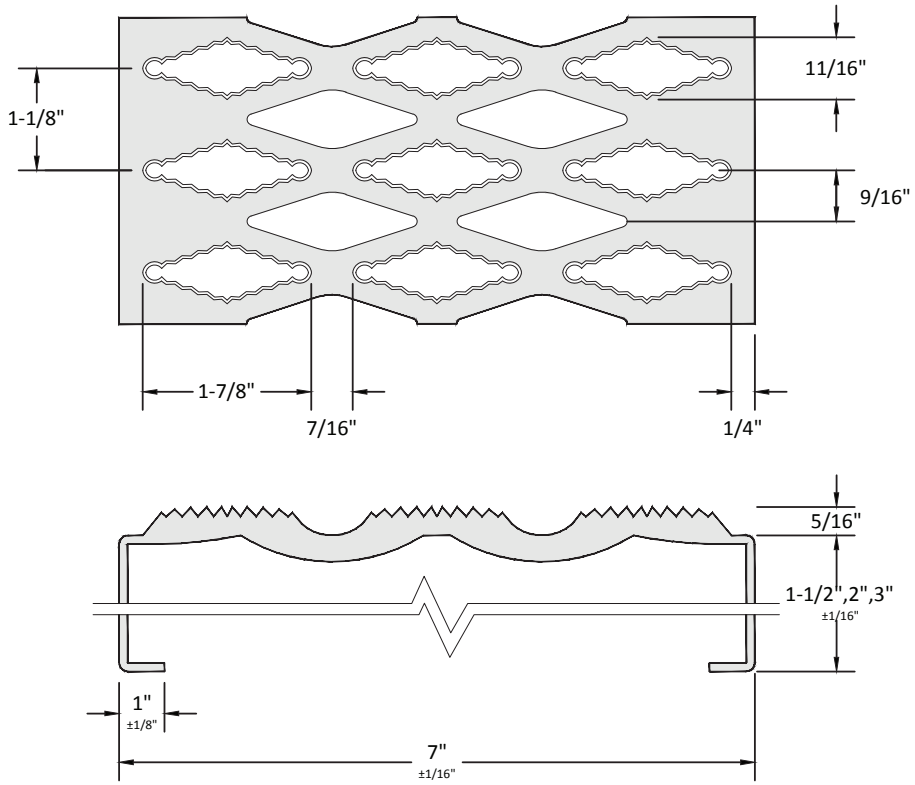


**ACCEPTABLE LOADING FOR CLEAR SPAN: UNIFORM/CONCENTRATED (LBS)**

| WIDTH | DEPTH | ALLOY | GAUGE | 24" SPAN | 36"SPAN | 48"SPAN | 60"SPAN | 72"SPAN |
|---|---|---|---|---|---|---|---|---|
| 7" | 1.5" | Galv./Steel | 14ga | 766/447 | 343/300 | 194/227 | 126/183 NR | 92/159 NR |
| | | | 12ga | 1304/761 | 582/509 | 329/384 | 212/309 | 148/259 NR |
| | 2.0" | Galv./Steel | 14ga | 1374/802 | 613/536 | 347/404 | 223/326 | 156/273 NR |
| | | | 12ga | 1710/997 | 762/667 | 430/502 | 277/404 | 194/339 |
| | | Alum. | 0.080" | 975/568 | 434/380 | 244/285 | 157/228 NR | 109/191 NR |
| | | | 0.125" | 1514/963 | 734/642 | 414/481 | 264/386 | 184/321 NR |
| | | 304ss | 14ga | 1819/1061 | 811/710 | 458/534 | 295/430 | 206/361 NR |
| | | 316ss | 14ga | 1819/1061 | 811/710 | 458/534 | 295/430 | 206/361 NR |

**NR** = Not Recommended

Loads and deflections are theoretical and based on static loading.

NAAMM MEMBER

# DIAMOND CHANNEL GRATING

4 Diamond

**9-1/2"**

**(241mm) Wide**



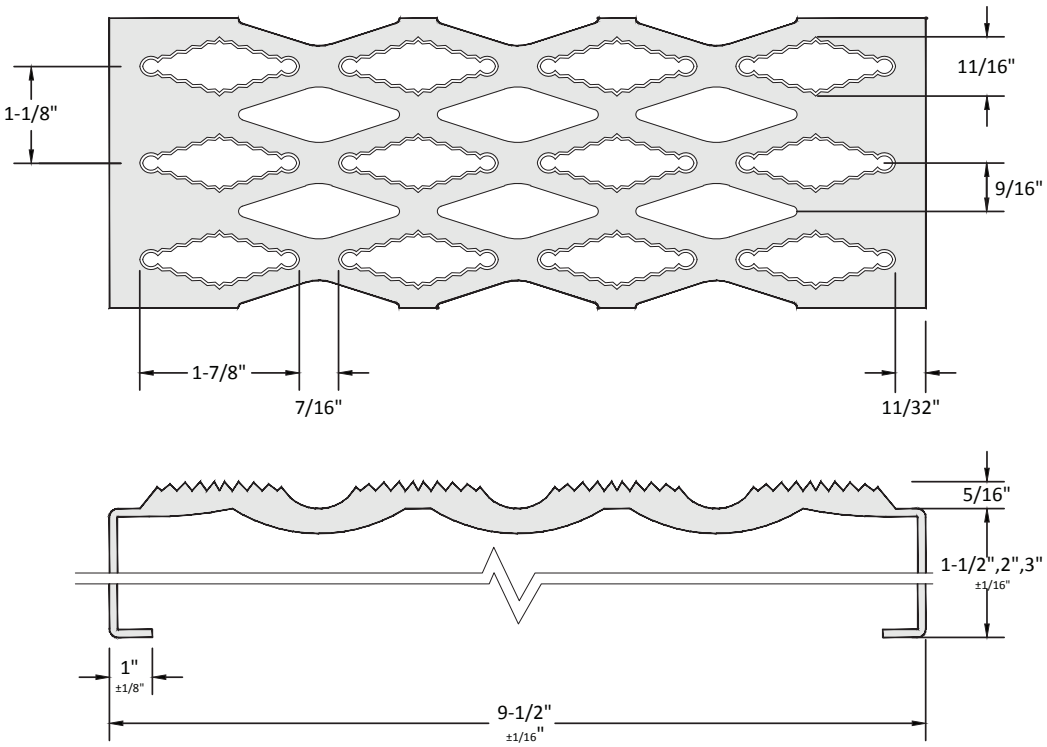


**ACCEPTABLE LOADING FOR CLEAR SPAN: UNIFORM/CONCENTRATED (LBS)**

| WIDTH | DEPTH | ALLOY | GAUGE | 24" SPAN | 36"SPAN | 48"SPAN | 60"SPAN | 72"SPAN |
|---|---|---|---|---|---|---|---|---|
| 9-1/2" | 1.5" | Galv./Steel | 14ga | 779/617 | 346/411 | 195/309 | 125/247 NR | 87/206 NR |
| | | | 12ga | 988/782 | 441/524 | 249/395 | 161/318 | 113/268 NR |
| | 2.0" | Galv./Steel | 14ga | 1063/841 | 474/563 | 268/425 | 173/342 | 121/288 NR |
| | | | 12ga | 1382/1094 | 616/732 | 348/551 | 224/443 | 157/372 |
| | | Alum. | 0.080" | 800/633 | 356/422 | 200/317 NR | 128/253 NR | 89/211 NR |
| | | | 0.125" | 1116/927 | 565/671 | 318/503 | 204/403 | 140/335 NR |
| | | 304ss | 16ga | 750/455 | 330/398 | 186/299 | 120/239 NR | 82/199 NR |
| | | | 14ga | 1540/915 | 687/816 | 388/614 | 250/494 | 175/415 NR |
| | | 316ss | 14ga | 1540/915 | 687/816 | 388/614 | 250/494 | 175/415 NR |
| | 3.0" | Galv | 12ga | 2270/1355 | 1009/1355 | 567/1098 | 444/878 | 308/732 |

**NR** = Not Recommended

Loads and deflections are theoretical and based on static loading.

NAAMM MEMBER

# DIAMOND CHANNEL GRATING

## 5 Diamond

**11-3/4"**

**(298mm) Wide**



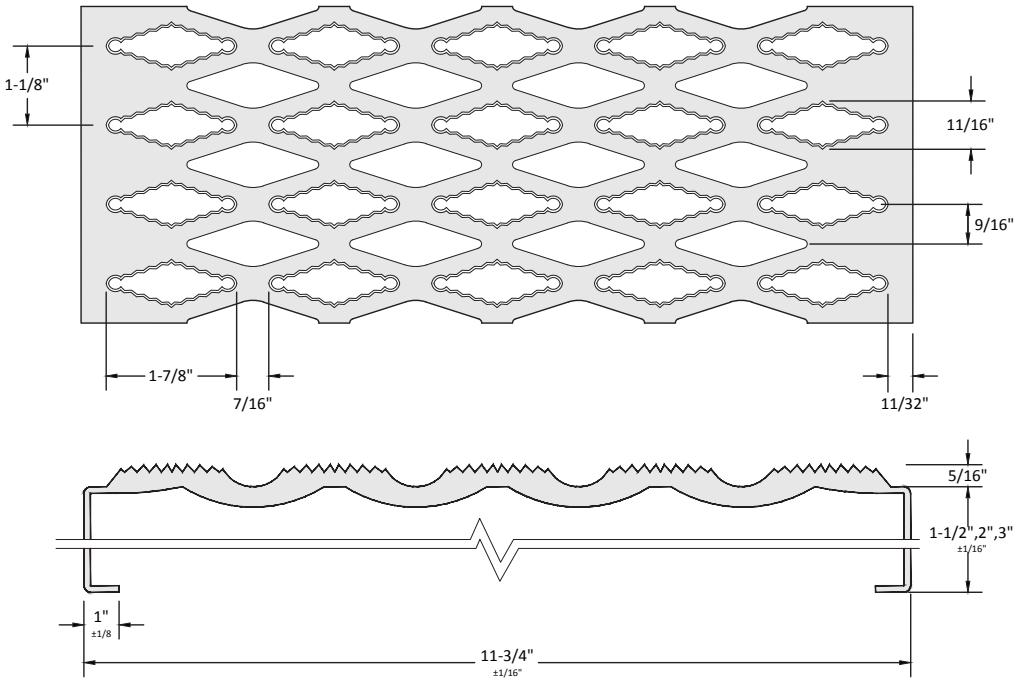


**ACCEPTABLE LOADING FOR CLEAR SPAN: UNIFORM/CONCENTRATED (LBS)**

| WIDTH | DEPTH | ALLOY | GAUGE | 24" SPAN | 36"SPAN | 48"SPAN | 60"SPAN | 72"SPAN |
|---|---|---|---|---|---|---|---|---|
| **11-3/4"** | 1.5" | Galv./Steel | 14ga | 543/493 | 243/357 | 138/270 | 89/219 NR | 63/185 NR |
| | | | 12ga | 842/815 | 376/552 | 212/415 | 137/334 NR | 95/280 NR |
| | 2.0" | Galv./Steel | 14ga | 895/493 | 400/493 | 226/443 | 146/357 | 102/299 NR |
| | | | 12ga | 1243/815 | 554/814 | 313/613 | 200/491 | 139/409 NR |
| | | Alum. | 0.080" | 715/362 | 319/362 | 179/350 | 114/280 NR | 79/233 NR |
| | | | 0.125" | 904/753 | 451/662 | 255/495 | 162/397 | 113/330 NR |
| | | 304ss | 16ga | 606/376 | 296/376 | 167/333 | 107/266 NR | 74/222 NR |
| | | | 14ga | 1276/899 | 565/830 | 319/625 | 206/503 NR | 144/423 NR |
| | | 316ss | 14ga | 1276/899 | 565/830 | 319/625 | 206/503 NR | 144/423 NR |
| | 3.0" | Galv. | 12ga | 1666/815 | 946/815 | 532/815 | 341/815 | 237/695 |

**NR** = Not Recommended

Loads and deflections are theoretical and based on static loading.

NAAMM MEMBER

# DIAMOND CHANNEL GRATING

8 Diamond

**18-3/4"**

**(476mm) Wide**



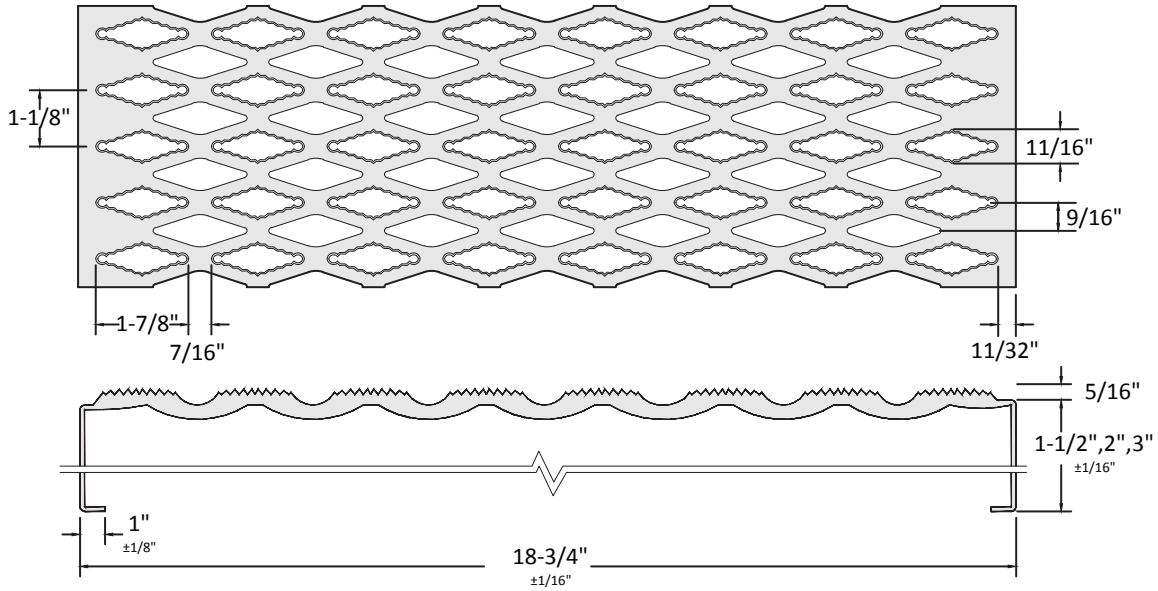


| ACCEPTABLE LOADING FOR CLEAR SPAN: UNIFORM/CONCENTRATED (LBS) | | | | | | | | |
|---|---|---|---|---|---|---|---|---|
| WIDTH | DEPTH | ALLOY | GAUGE | 24" SPAN | 36"SPAN | 48"SPAN | 60"SPAN | 72"SPAN |
| 18-3/4" | 1.5" | Galv./Steel | 14ga | 411/555 | 182/428 | 103/321 NR | 66/257 NR | 46/214 NR |
| | | | 12ga | 553/818 | 246/576 | 138/432 | 89/346 NR | 61/288 NR |
| | 2.0" | Galv./Steel | 14ga | 606/555 | 269/555 | 152/474 | 97/379 NR | 67/316 NR |
| | | | 12ga | 825/818 | 367/818 | 206/644 | 132/516 NR | 92/430 NR |
| | | Alum. | 0.100" | 514/537 | 229/537 | 129/402 NR | 83/323 NR | 58/269 nr |
| | 3.0" | Galv | 12ga | 1047/818 | 654/818 | 368/818 | 235/818 | 163/766 |

**NR** = Not Recommended

Loads and deflections are theoretical and based on static loading.

NAAMM MEMBER

# DIAMOND CHANNEL GRATING

## 10 Diamond

**24"**

**(610mm) Wide**



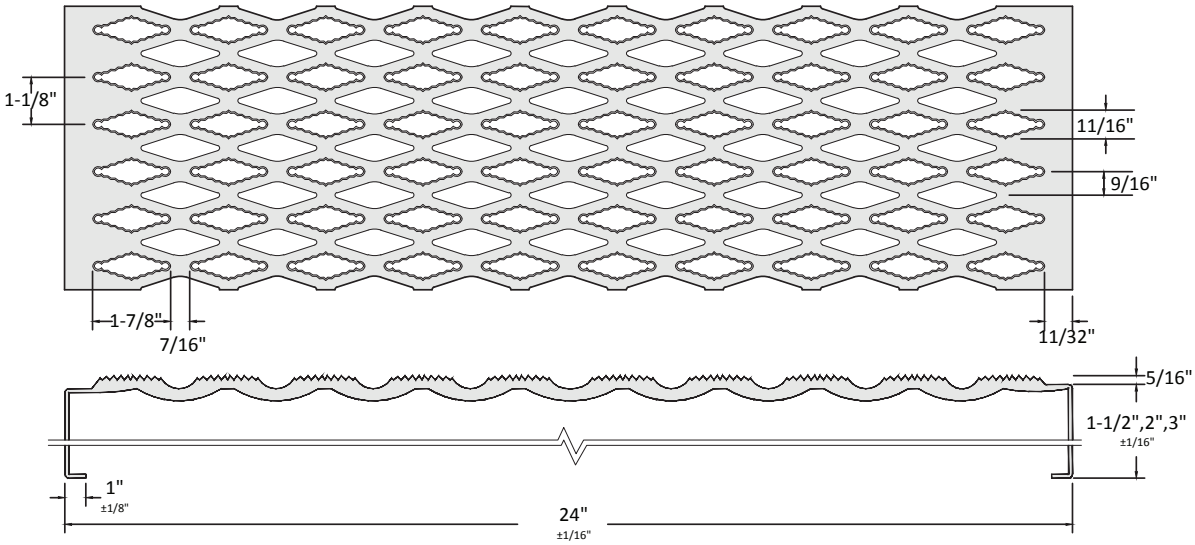


| ACCEPTABLE LOADING FOR CLEAR SPAN: UNIFORM/CONCENTRATED (LBS) | | | | | | | | |
|---|---|---|---|---|---|---|---|---|
| WIDTH | DEPTH | ALLOY | GAUGE | 24" SPAN | 36"SPAN | 48"SPAN | 60"SPAN | 72"SPAN |
| 24" | 1.5" | Galv./Steel | 14ga | 367/571 | 163/489 | 92/367 NR | 59/293 NR | 41/245 NR |
| | | | 12ga | 496/861 | 220/661 | 124/496 NR | 79/397 NR | 55/332 NR |
| | 2.0" | Galv./Steel | 14ga | 539/571 | 240/571 | 135/539 | 86/431 NR | 60/359 NR |
| | | | 12ga | 738/861 | 328/861 | 185/738 | 118/590 NR | 82/492 NR |
| | 3.0" | Galv | 12ga | 861/861 | 580/861 | 326/861 | 209/861 | 145/861 |

**NR** = Not Recommended

Loads and deflections are theoretical and based on static loading.

NAAMM MEMBER

# DIAMOND CHANNEL GRATING

## 10 Diamond - Walkway Grating

**24"**

**(610mm) Wide**



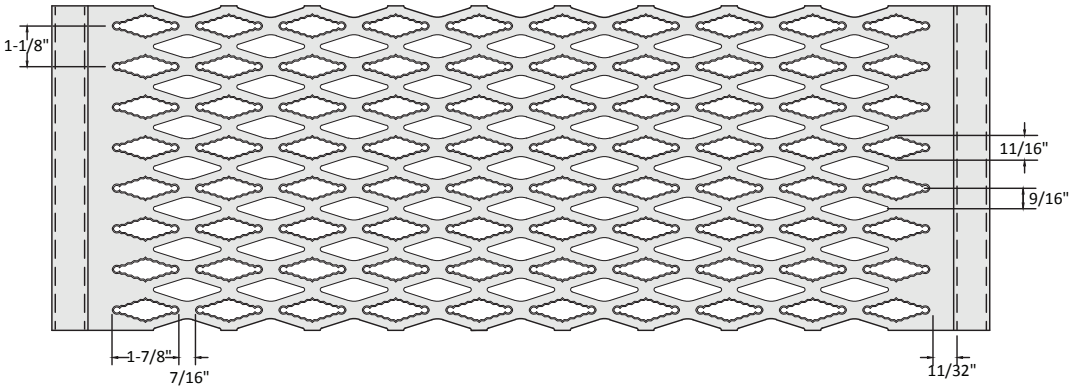


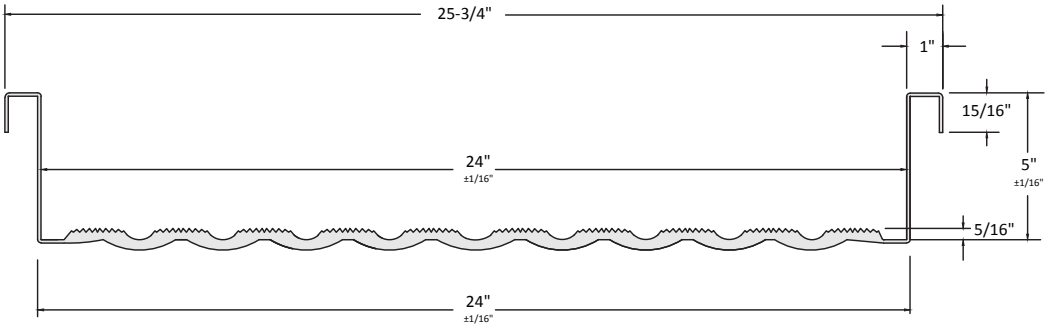


| ACCEPTABLE LOADING FOR CLEAR SPAN: UNIFORM/CONCENTRATED (LBS) | | | | | | | | |
|---|---|---|---|---|---|---|---|---|
| WIDTH | DEPTH | ALLOY | GAUGE | 24" SPAN | 36"SPAN | 48"SPAN | 60"SPAN | 72"SPAN |
| **24"** | 5.0" | Galv. | 12ga | 475/900 | 475/900 | 475/900 | 340/850 | 236/709 |

Loads and deflections are theoretical and based on static loading. Alloys available in Galvanized

# ROUND CHANNEL GRATING

## 2 Hole

**5"**

**(127mm) Wide**



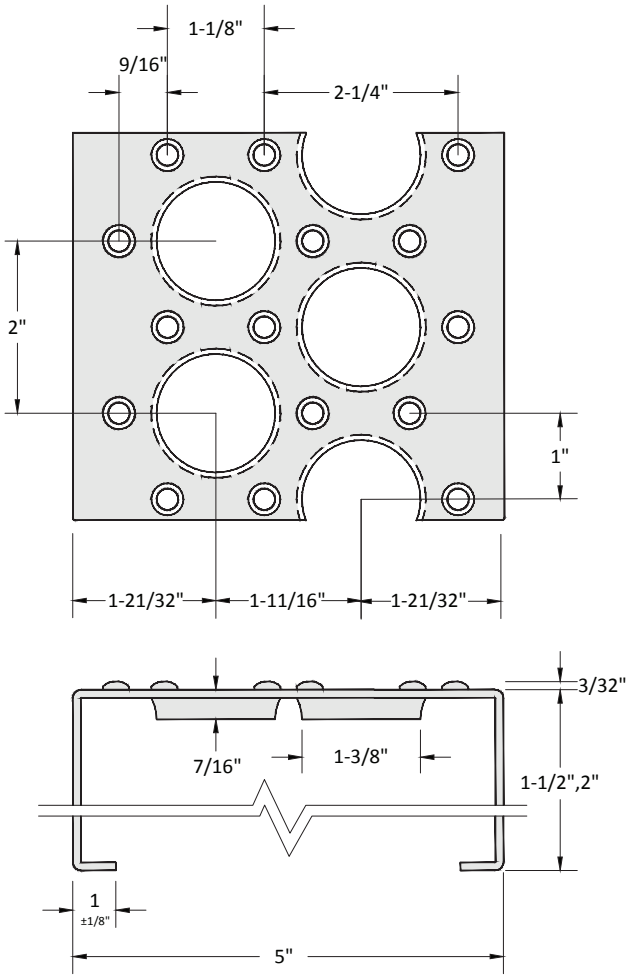


**ACCEPTABLE LOADING FOR CLEAR SPAN: UNIFORM/CONCENTRATED (LBS)**

| WIDTH | DEPTH | ALLOY | GAUGE | 24" SPAN | 36"SPAN | 48"SPAN | 60"SPAN | 72"SPAN |
|---|---|---|---|---|---|---|---|---|
| 5" | 1.5" | Galv./Steel | 13ga | 1947/811 | 868/542 | 490/408 | 315/328 | 220/275 |
| | | | 11ga | 2832/1172 | 1259/781 | 708/586 | 453/469 | 315/391 |
| | 2.0" | Galv./Steel | 13ga | 2943/973 | 1311/819 | 739/616 | 475/495 | 331/414 |
| | | | 11ga | 4278/1738 | 1901/1159 | 1070/869 | 685/695 | 475/579 |
| | | Alum. | 0.125ga | 2479/1033 | 1102/689 | 620/516 | 397/413 | 275/344 NR |
| | | 304ss | 14ga | 3295/1373 | 1464/915 | 824/686 | 527/549 | 366/458 |
| | | 316ss | 14ga | 3295/1373 | 1464/915 | 824/686 | 527/549 | 366/458 |

**NR** = Not Recommended

Loads and deflections are theoretical and based on static loading.

NAAMM MEMBER

# ROUND CHANNEL GRATING

3 Hole

**7"**

**(178mm) Wide**



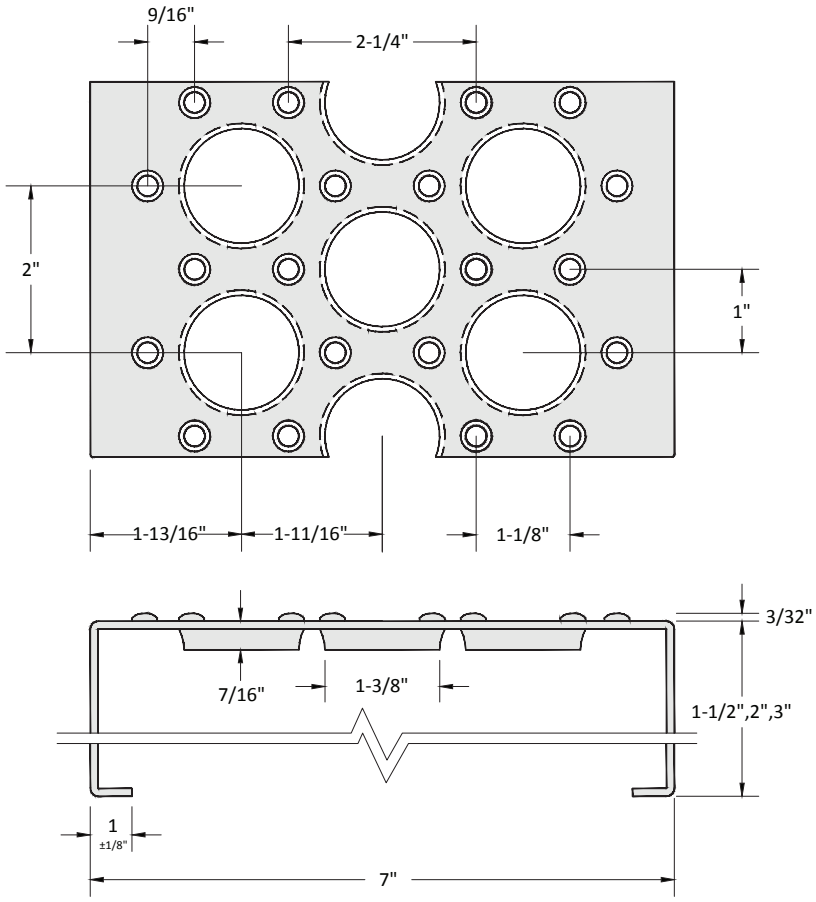


| ACCEPTABLE LOADING FOR CLEAR SPAN: UNIFORM/CONCENTRATED (LBS) | | | | | | | | |
|---|---|---|---|---|---|---|---|---|
| WIDTH | DEPTH | ALLOY | GAUGE | 24" SPAN | 36"SPAN | 48"SPAN | 60"SPAN | 72"SPAN |
| 7" | 1.5" | Galv./Steel | 13ga | 1489/793 | 664/581 | 375/437 | 241/352 | 169/295 |
| | | | 11ga | 1921/1098 | 856/749 | 483/564 | 310/453 | 217/379 |
| | 2.0" | Galv./Steel | 13ga | 2229/793 | 993/793 | 560/654 | 360/525 | 251/440 |
| | | | 11ga | 2995/1098 | 1333/1098 | 752/877 | 483/704 | 336/589 |
| | | Alum. | 0.125ga | 1984/1157 | 882/771 | 496/579 | 317/463 | 220/386 |
| | | 304ss | 14ga | 2147/1253 | 955/835 | 537/626 | 344/501 | 239/418 |
| | | 316ss | 14ga | 2147/1253 | 955/835 | 537/626 | 344/501 | 239/418 |
| | 3.0" | Galv. | 11ga | 3765/1098 | 2503/1098 | 1410/1098 | 904/1098 | 629/1098 |

Loads and deflections are theoretical and based on static loading.

NAAMM MEMBER

# ROUND CHANNEL GRATING

5 Hole

**10"**

**(254mm) Wide**



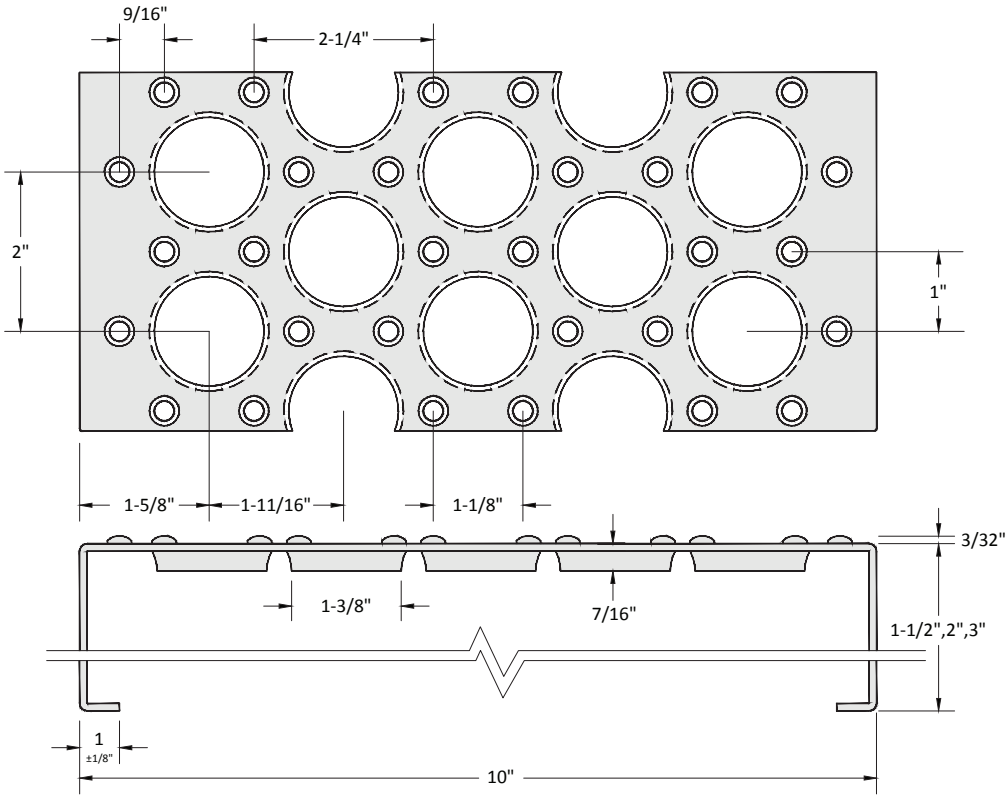


| ACCEPTABLE LOADING FOR CLEAR SPAN: UNIFORM/CONCENTRATED (LBS) | | | | | | | | |
|---|---|---|---|---|---|---|---|---|
| WIDTH | DEPTH | ALLOY | GAUGE | 24" SPAN | 36"SPAN | 48"SPAN | 60"SPAN | 72"SPAN |
| 10" | 1.5" | Galv./Steel | 13ga | 1128/625 | 501/625 | 282/470 | 181/379 | 125/313 |
| | | | 11ga | 1343/861 | 599/749 | 338/564 | 218/453 | 152/380 |
| | 2.0" | Galv./Steel | 13ga | 1500/625 | 748/625 | 422/625 | 272/566 | 190/474 |
| | | | 11ga | 2067/861 | 975/861 | 550/861 | 353/735 | 245/612 |
| | | Alum. | 0.125ga | 1278/533 | 605/533 | 341/533 | 218/455 | 152/380 |
| | | 304ss | 14ga | 946/394 | 529/394 | 298/394 | 190/394 | 133/331 |
| | | 316ss | 14ga | 946/394 | 529/394 | 298/394 | 190/394 | 133/331 |
| | 3.0" | Galv. | 11ga | 2067/861 | 1816/861 | 1021/861 | 654/861 | 454/861 |

Loads and deflections are theoretical and based on static loading.

NAAMM MEMBER

# ROUND CHANNEL GRATING

6 Hole

**12"**

**(305mm) Wide**



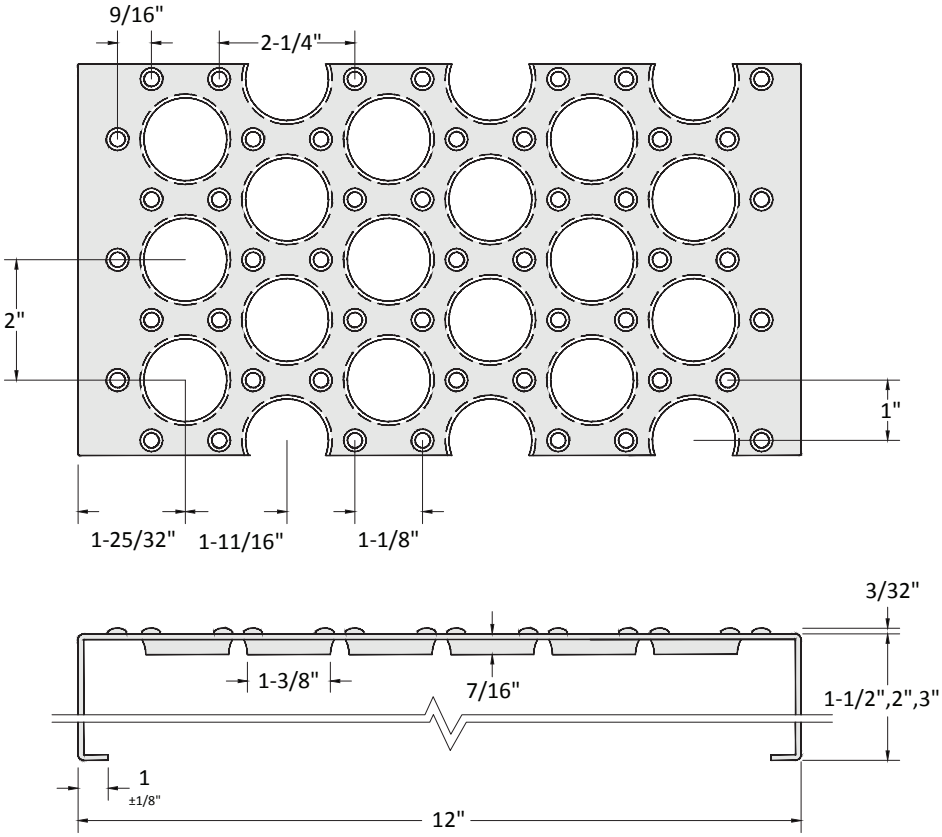


| ACCEPTABLE LOADING FOR CLEAR SPAN: UNIFORM/CONCENTRATED (LBS) | | | | | | | | |
|---|---|---|---|---|---|---|---|---|
| WIDTH | DEPTH | ALLOY | GAUGE | 24" SPAN | 36"SPAN | 48"SPAN | 60"SPAN | 72"SPAN |
| 12" | 1.5" | Galv./Steel | 13ga | 991/866 | 442/663 | 250/500 | 161/403 | 113/338 |
| | | | 11ga | 1118/1118 | 499/748 | 282/564 | 182/454 | 127/381 |
| | 2.0" | Galv./Steel | 13ga | 1457/866 | 649/866 | 367/733 | 236/590 | 165/494 |
| | | | 11ga | 1875/1362 | 835/1253 | 471/942 | 303/757 | 211/634 |
| | | Alum. | 0.125ga | 1245/839 | 554/831 | 312/624 | 200/500 | 139/417 |
| | | 304ss | 14ga | 871/435 | 417/435 | 236/435 | 152/434 | 106/361 |
| | | 316ss | 14ga | 871/435 | 417/435 | 236/435 | 152/434 | 106/361 |
| | 3.0" | Galv. | 11ga | 2725/1362 | 1647/1362 | 927/1362 | 565/1362 | 414/1243 |

Loads and deflections are theoretical and based on static loading.

# ROUND CHANNEL GRATING

10 Hole

**18"**

**(457mm) Wide**



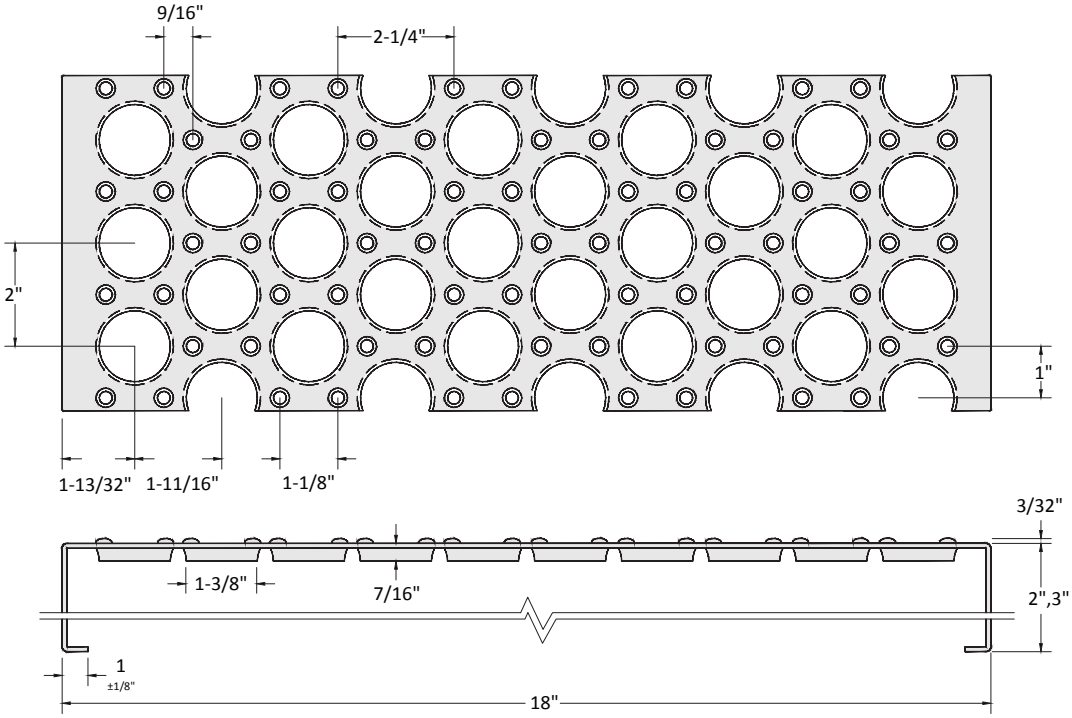


| ACCEPTABLE LOADING FOR CLEAR SPAN: UNIFORM/CONCENTRATED (LBS) | | | | | | | | |
|---|---|---|---|---|---|---|---|---|
| WIDTH | DEPTH | ALLOY | GAUGE | 24" SPAN | 36"SPAN | 48"SPAN | 60"SPAN | 72"SPAN |
| 18" | 1.5" | Galv./Steel | 13ga | 641/480 | 304/480 | 174/480 | 112/421 | 79/355 |
| | | | 11ga | 752/1116 | 336/755 | 190/570 | 123/460 | 86/387 |
| | 2.0" | Galv./Steel | 13ga | 641/480 | 460/480 | 260/480 | 168/480 | 117/480 |
| | | | 11ga | 1207/1116 | 538/1116 | 304/911 | 195/733 | 137/615 |
| | | Alum. | 0.125ga | 792/594 | 360/594 | 203/594 | 130/567 | 91/472 |
| | 3.0" | Galv. | 11ga | 1488/1116 | 1153/1116 | 649/1116 | 415/1116 | 288/1116 |

Loads and deflections are theoretical and based on static loading.

NAAMM MEMBER

# ROUND CHANNEL GRATING

13 Hole

**24"**

**(610mm) Wide**



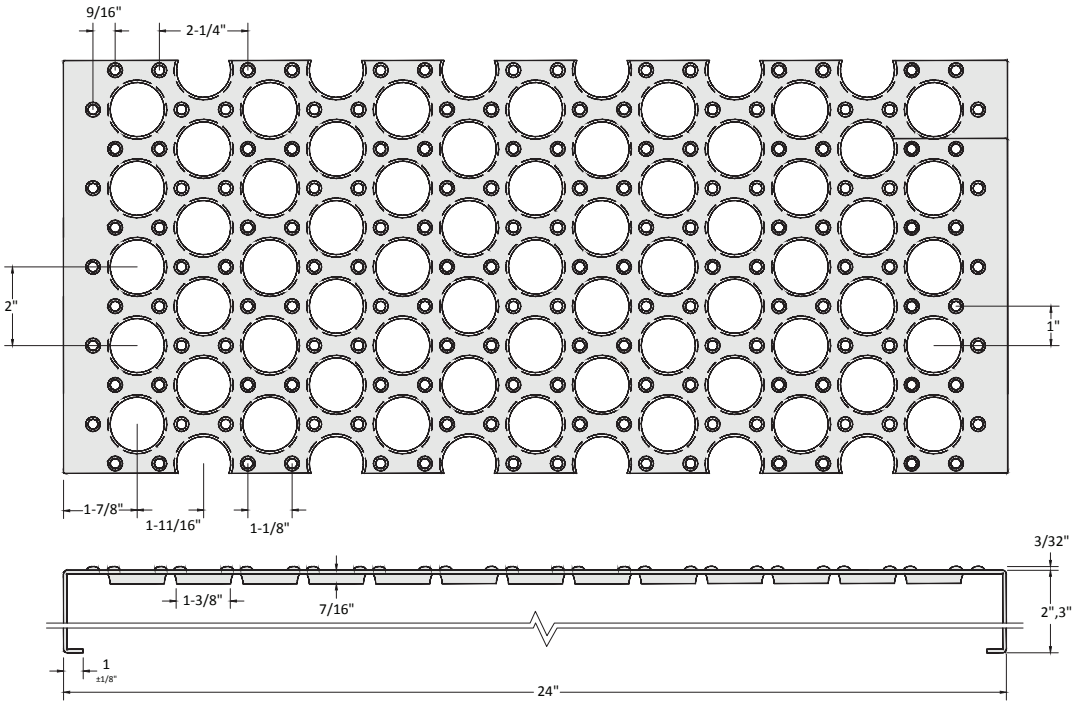


| ACCEPTABLE LOADING FOR CLEAR SPAN: UNIFORM/CONCENTRATED (LBS) | | | | | | | | |
|---|---|---|---|---|---|---|---|---|
| WIDTH | DEPTH | ALLOY | GAUGE | 24" SPAN | 36"SPAN | 48"SPAN | 60"SPAN | 72"SPAN |
| 24" | 2.0" | Galv./Steel | 11ga | 524/524 | 467/524 | 264/524 | 170/524 | 119/524 |
| | 3.0" | Galv./Steel | 11ga | 467/524 | 524/524 | 473/524 | 304/524 | 212/524 |

Loads and deflections are theoretical and based on static loading.

NAAMM MEMBER

# ROUND CHANNEL GRATING

16 Hole

**30"**

**(762mm) Wide**



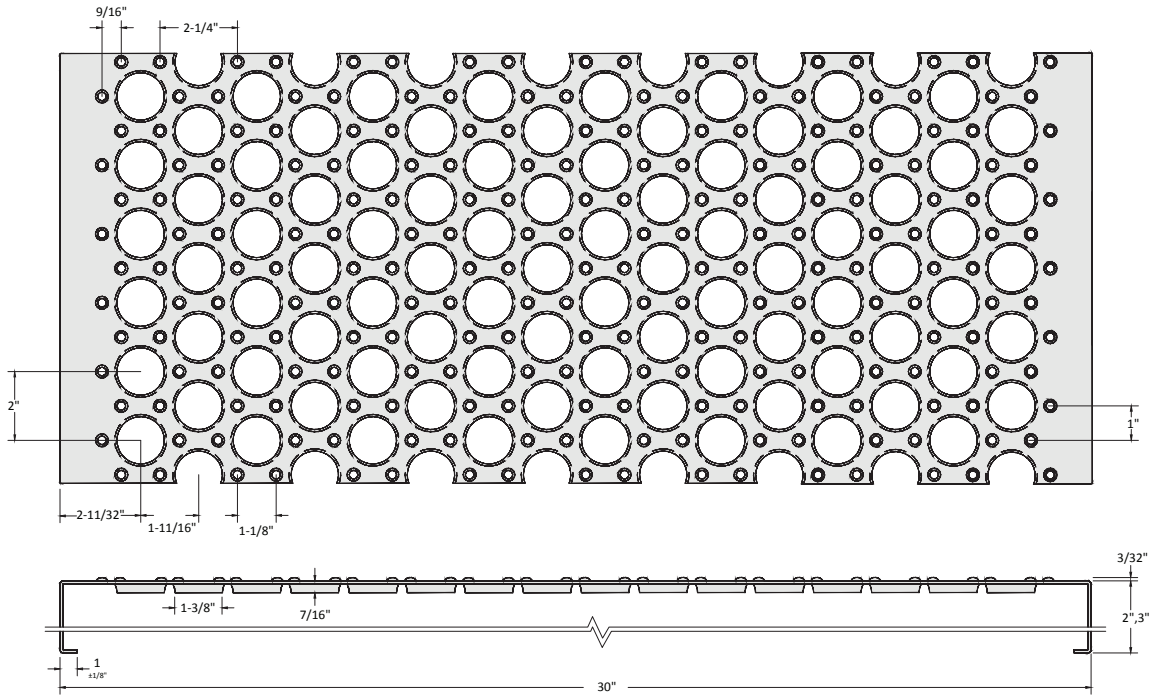


| ACCEPTABLE LOADING FOR CLEAR SPAN: UNIFORM/CONCENTRATED (LBS) | | | | | | | | |
|---|---|---|---|---|---|---|---|---|
| WIDTH | DEPTH | ALLOY | GAUGE | 24" SPAN | 36"SPAN | 48"SPAN | 60"SPAN | 72"SPAN |
| 30" | 2.0" | Galv./Steel | 11ga | 275/343 | 275/343 | 231/343 | 148/343 | 103/343 |
| | 3.0" | Galv./Steel | 11ga | 275/343 | 275/343 | 275/343 | 219/343 | 152/343 |

Loads and deflections are theoretical and based on static loading.

NAAMM MEMBER

# ROUND CHANNEL GRATING

## 13 Hole - Walkway Grating

**24"**

**(610mm) Wide**



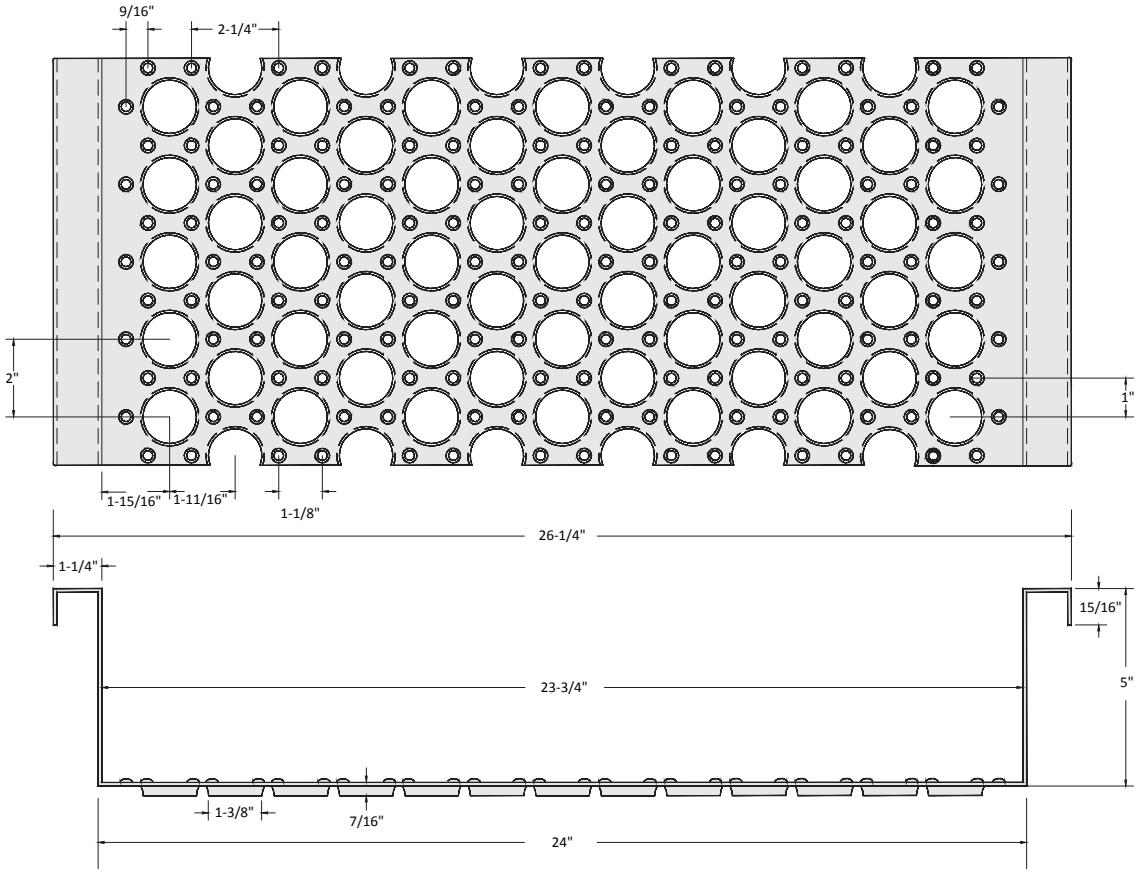


| ACCEPTABLE LOADING FOR CLEAR SPAN: UNIFORM/CONCENTRATED (LBS) | | | | | | | | |
|---|---|---|---|---|---|---|---|---|
| WIDTH | DEPTH | ALLOY | GAUGE | 24" SPAN | 36"SPAN | 48"SPAN | 60"SPAN | 72"SPAN |
| **24"** | 5.0" | Galv. | 11ga | 657/657 | 657/657 | 657/657 | 657/657 | 657/657 |

Loads and deflections are theoretical and based on static loading.

NAAMM MEMBER

# ROUND CHANNEL GRATING

## 16 Hole - Walkway Grating

**30"**

**(762mm) Wide**



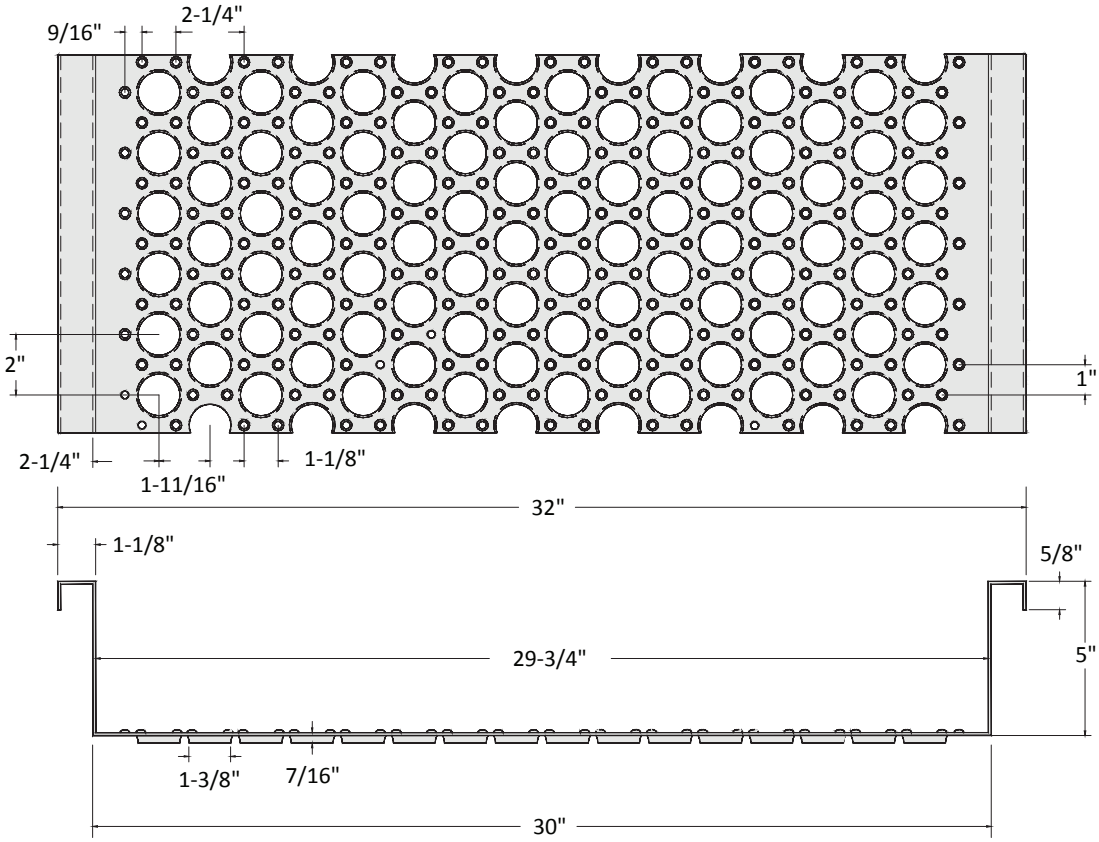


| ACCEPTABLE LOADING FOR CLEAR SPAN: UNIFORM/CONCENTRATED (LBS) | | | | | | | | |
|---|---|---|---|---|---|---|---|---|
| WIDTH | DEPTH | ALLOY | GAUGE | 24" SPAN | 36"SPAN | 48"SPAN | 60"SPAN | 72"SPAN |
| **30"** | 5.0" | Galv. | 11ga | 384/480 | 384/480 | 384/480 | 384/480 | 384/480 |

Loads and deflections are theoretical and based on static loading.

NAAMM MEMBER

# ROUND CHANNEL GRATING

## 18 Hole - Walkway Grating

**36"**

**(914mm) Wide**



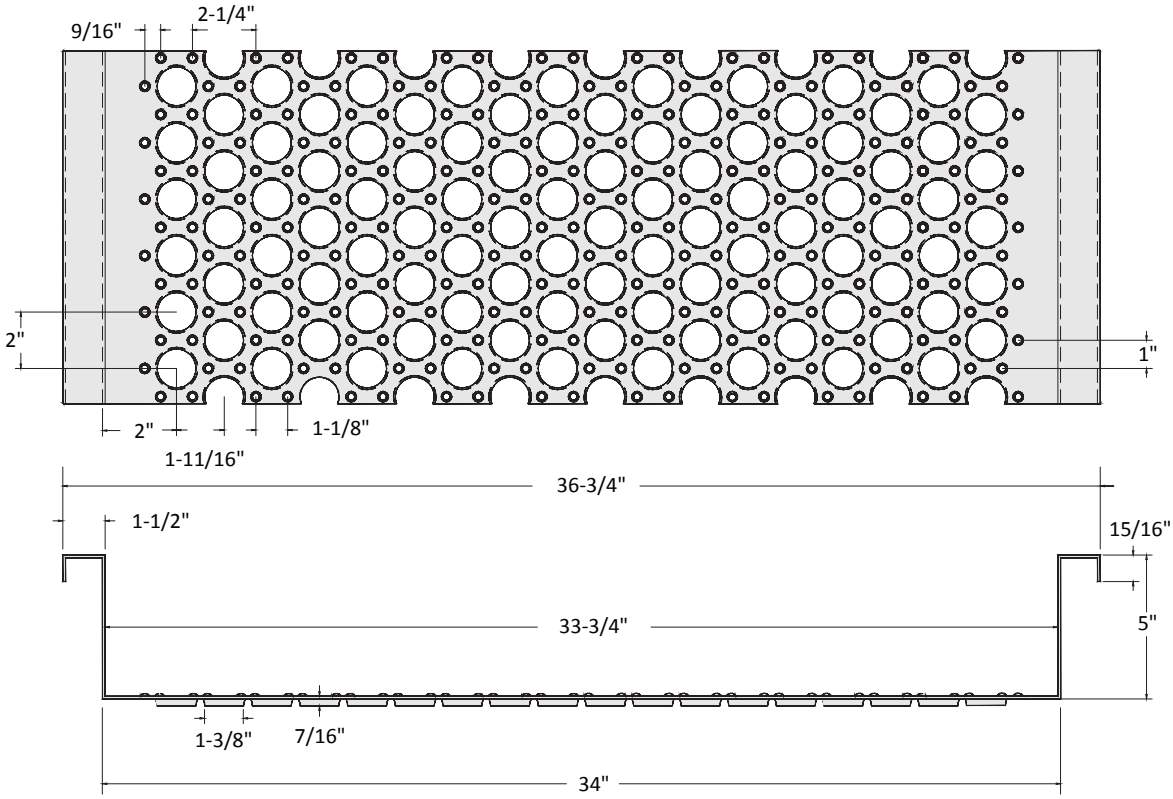


| ACCEPTABLE LOADING FOR CLEAR SPAN: UNIFORM/CONCENTRATED (LBS) | | | | | | | | |
|---|---|---|---|---|---|---|---|---|
| WIDTH | DEPTH | ALLOY | GAUGE | 24" SPAN | 36"SPAN | 48"SPAN | 60"SPAN | 72"SPAN |
| **36"** | 5.0" | Galv. | 11ga | 185/273 | 185/273 | 185/273 | 185/273 | 185/273 |

Loads and deflections are theoretical and based on static loading.

# DIMPLE CHANNEL GRATING

**7"**

**(178mm) Wide**



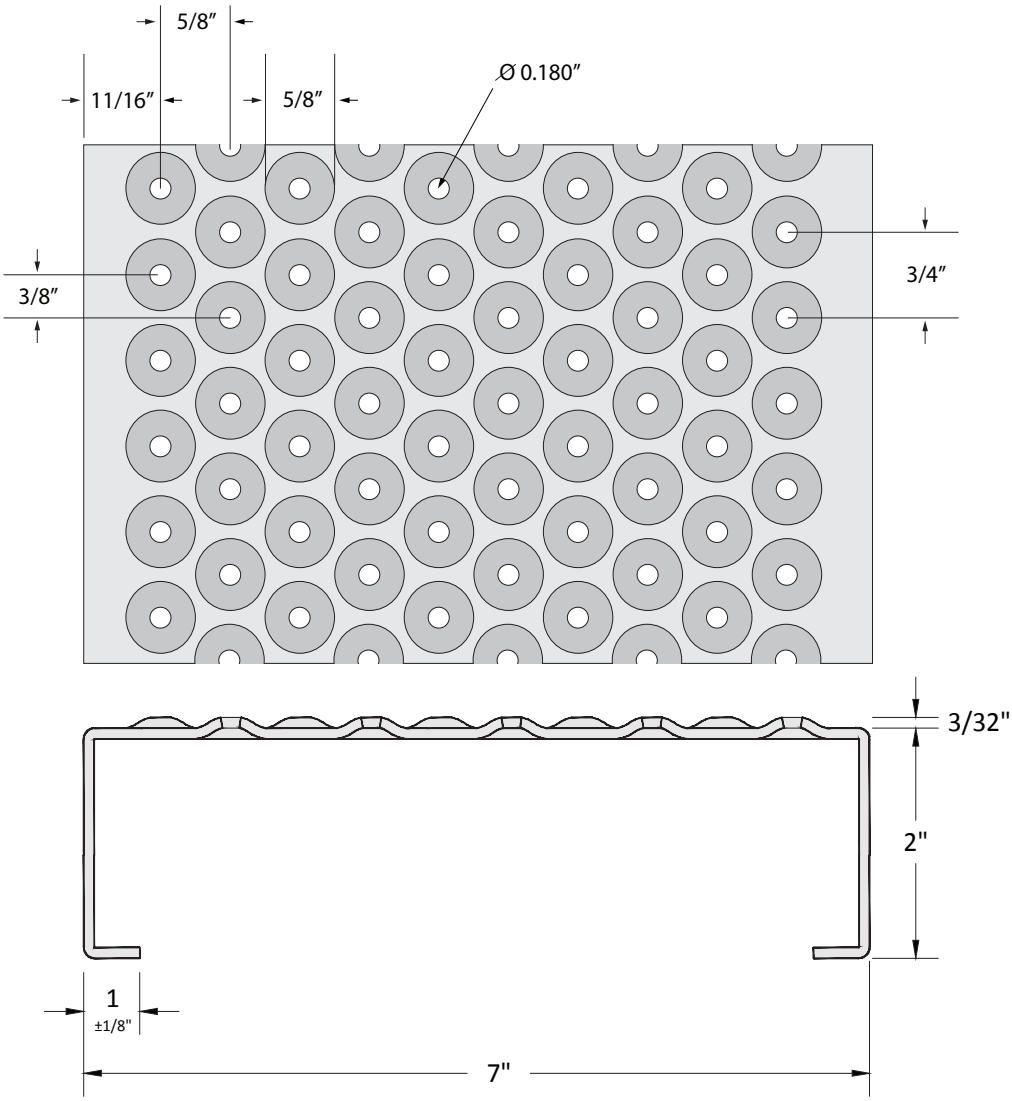


| ACCEPTABLE LOADING FOR CLEAR SPAN: UNIFORM/CONCENTRATED (LBS) | | | | | | | | |
|---|---|---|---|---|---|---|---|---|
| WIDTH | DEPTH | ALLOY | GAUGE | 24" SPAN | 36"SPAN | 48"SPAN | 60"SPAN | 72"SPAN |
| **7"** | 2.0" | Galv. | 11ga | 2084/1405 | 1235/1061 | 651/746 | 400/689 | 322/527 |
| | | Alum. | 0.125ga | 727/490 | 431/370 | 227/260 | 139/173 | 112/116 |

Loads and deflections are theoretical and based on static loading.

# DIMPLE CHANNEL GRATING

## 10"
(254mm) Wide

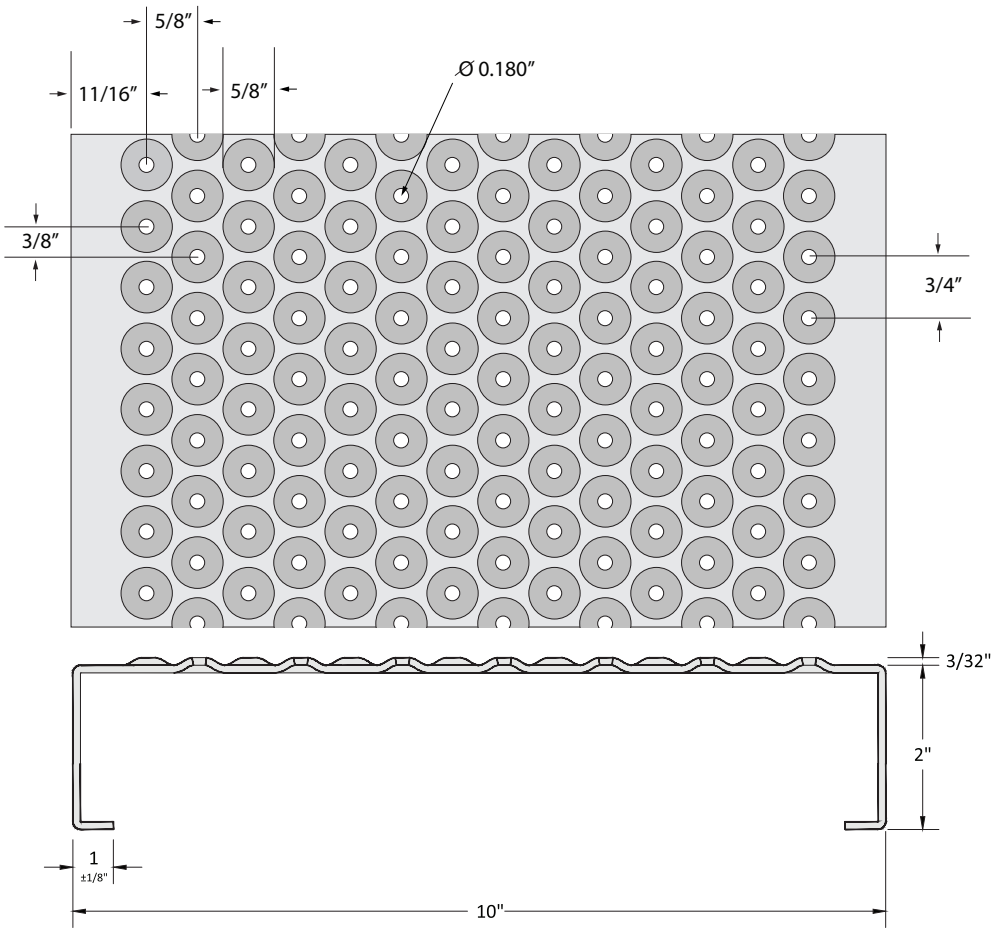


| ACCEPTABLE LOADING FOR CLEAR SPAN: UNIFORM/CONCENTRATED (LBS) | | | | | | | | |
|---|---|---|---|---|---|---|---|---|
| WIDTH | DEPTH | ALLOY | GAUGE | 24" SPAN | 36"SPAN | 48"SPAN | 60"SPAN | 72"SPAN |
| 10" | 2.0" | Galv. | 11ga | 1605/1554 | 951/1174 | 502/826 | 308/551 | 248/367 |
| | | Alum. | 0.125ga | 560/542 | 332/409 | 175/288 | 107/192 | 86/128 |

Loads and deflections are theoretical and based on static loading.

# DIMPLE CHANNEL GRATING

**12"**

**(305mm) Wide**



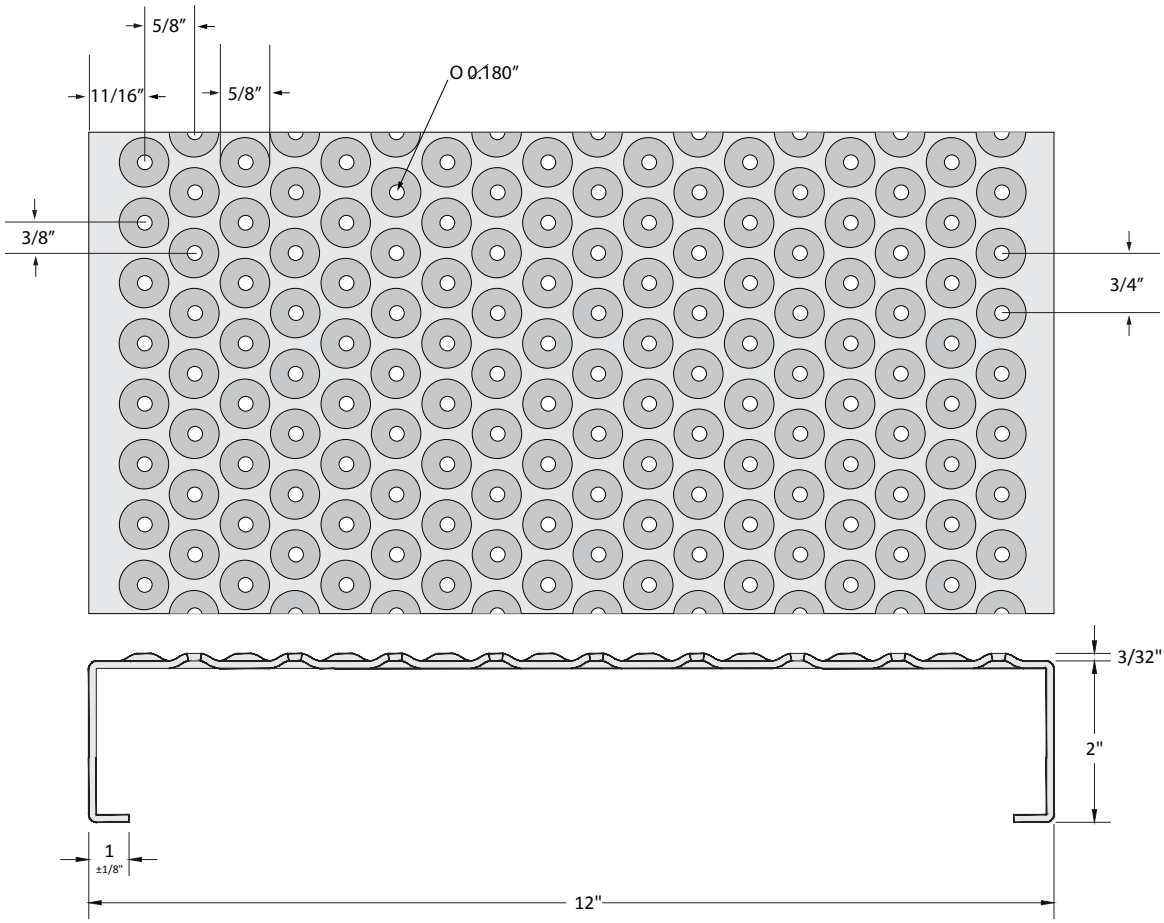


| ACCEPTABLE LOADING FOR CLEAR SPAN: UNIFORM/CONCENTRATED (LBS) | | | | | | | | |
|---|---|---|---|---|---|---|---|---|
| WIDTH | DEPTH | ALLOY | GAUGE | 24" SPAN | 36"SPAN | 48"SPAN | 60"SPAN | 72"SPAN |
| **12"** | 2.0" | Galv. | 11ga | 1395/1624 | 827/1227 | 436/863 | 268/575 | 215/384 |
| | | Alum. | 0.125ga | 487/566 | 288/428 | 152/301 | 93/201 | 75/134 |

Loads and deflections are theoretical and based on static loading.

NAAMM MEMBER

# CHANNEL GRATING STAIR TREADS

**Standard Channel Grating Tread end-plate Detail**

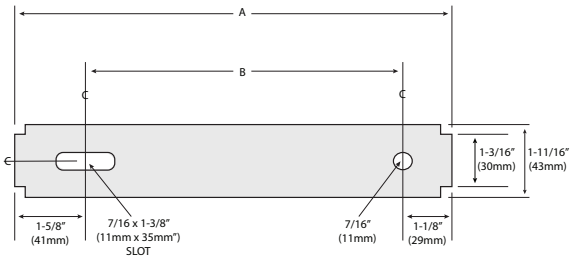


| STANDARD END PLATE DIMENSIONS | | | | | |
|---|---|---|---|---|---|
| TREAD WIDTH | | DIMENSION A | | DIMENSION B | |
| METRIC (MM) | IMPERIAL (INCHES) | METRIC (MM) | IMPERIAL (INCHES) | METRIC (MM) | IMPERIAL (INCHES) |
| 127 | 5 | 121 | 4-3/4 | 51 | 2 |
| 178 | 7 | 171 | 6-3/4 | 102 | 4 |
| 254 | 10 | 248 | 9-3/4 | 178 | 7 |
| 305 | 12 | 298 | 11-3/4 | 239 | 9 |

**ACCEPTABLE LOADING FOR CLEAR SPAN: UNIFORM/CONCENTRATED (LBS)**

| STAIR TREAD - LOAD TABLES - GALV. STEEL | | | | | | | | | | | | | | | | | |
|---|---|---|---|---|---|---|---|---|---|---|---|---|---|---|---|---|---|
| GAUGE | | 2-DIAMOND | | | | 3-DIAMOND | | | | 4-DIAMOND | | | | 5-DIAMOND | | | |
| | | 14 | | 12 | | 14 | | 12 | | 14 | | 12 | | 14 | | 12 | |
| Span | Height | U | C | U | C | U | C | U | C | U | C | U | C | U | C | U | C |
| 24" | 1.5" | 1191 | 472 | 1576 | 624 | 761 | 443 | 1006 | 587 | 549 | 435 | 750 | 595 | 434 | 425 | 575 | 563 |
| | 2" | 1978 | 783 | 2513 | 995 | 1262 | 737 | 1604 | 936 | 911 | 604 | 1158 | 917 | 721 | 573 | 916 | 897 |
| 30" | 1.5" | 764 | 378 | 1011 | 500 | 488 | 356 | 645 | 470 | 353 | 349 | 481 | 476 | 278 | 342 | 369 | 452 |
| | 2" | 1268 | 611 | 1611 | 797 | 810 | 590 | 1029 | 750 | 584 | 578 | 742 | 734 | 463 | 566 | 587 | 719 |
| 36" | 1.5" | 532 | 315 | 703 | 418 | 340 | 30 | 450 | 393 | 245 | 300 | 335 | 398 | 194 | 300 | 258 | 378 |
| | 2" | 882 | 524 | 1121 | 665 | 563 | 492 | 716 | 626 | 407 | 483 | 517 | 614 | 322 | 473 | 409 | 601 |
| 48" | 2" | 498 | 394 | 633 | 501 | 318 | 372 | 404 | 472 | 230 | 364 | 292 | 463 | 182 | 356 | 232 | 454 |

| STAIR TREAD - LOAD TABLES - ALUMINUM & 304 STAINLESS | | | | | | | | | | | | | |
|---|---|---|---|---|---|---|---|---|---|---|---|---|---|
| GAUGE | | 2-DIAMOND | | 3-DIAMOND | | 4-DIAMOND | | | | 5-DIAMOND | | | |
| | | Aluminum .080" | | Aluminum .080" | | Aluminum .080" | | Stainless 304 | | Aluminum .080" | | Stainless 304 | |
| Span | Height | U | C | U | C | U | C | U | C | U | C | U | C |
| 24" | 2" | 1328 | 526 | 862 | 503 | 607 | 481 | 610 | 483 | 396 | 388 | 394 | 386 |
| 30" | 2" | 850 | 420 | 551 | 402 | 388 | 392 | 390 | 387 | 253 | 388 | 252 | 381 |
| 36" | 2" | 590 | 350 | 383 | 335 | 270 | 327 | 271 | 323 | 176 | 321 | 175 | 319 |
| 48" | 2" | 332 | 253 | 215 | 252 | 152 | 245 | 152 | 244 | 99 | 241 | 98 | 241 |

Loads and deflections are theoretical and based on static loading.

# LADDER RUNG

**60"**
**1524mm**

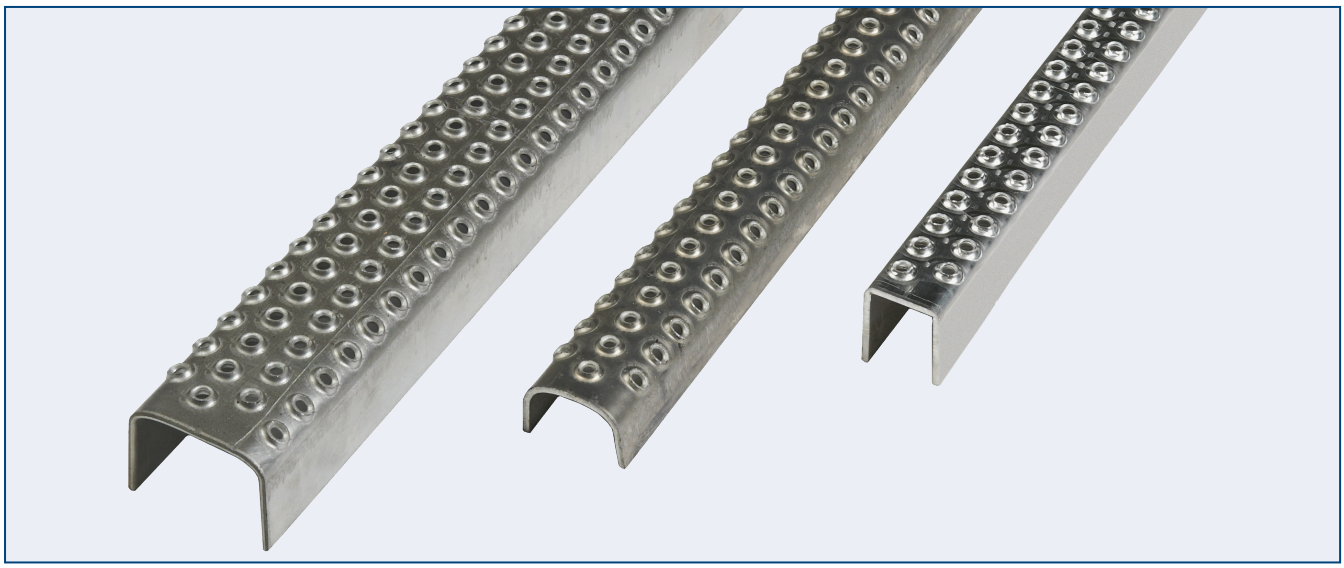

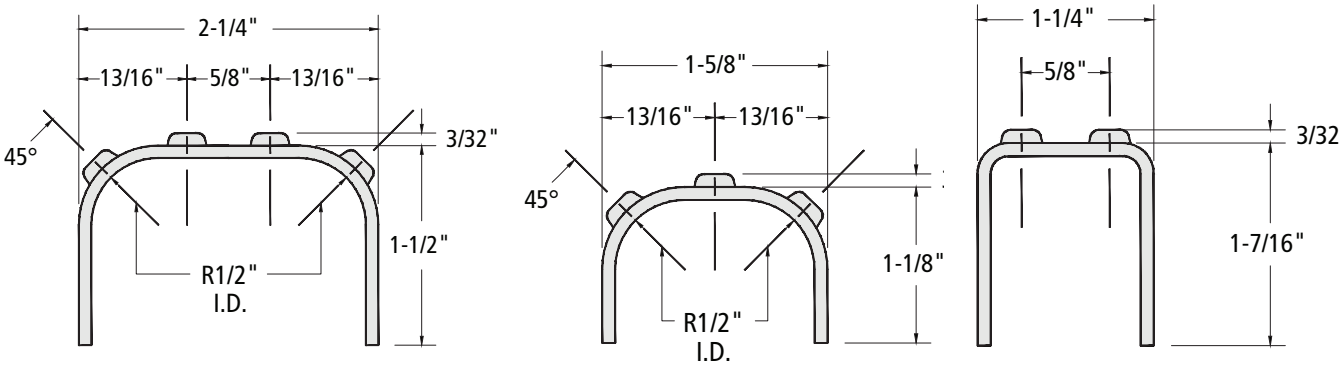


**SAFE ALLOWABLE CONCENTRATED LOAD (LBS)**

| TYPE | GAUGE | ALLOY | DEPTH | 16" SPAN | 18" SPAN | 20" SPAN | 24" SPAN |
|---|---|---|---|---|---|---|---|
| **2 hole 1-1/4"** | 13ga | HRPO | 1-7/16" | 508 | 451 | 401 | 338 |
| | 11ga | HRPO | 1-7/16" | 664 | 590 | 531 | 443 |
| | .125" | Alum | 1-7/16" | 471 | 418 | 377 | 314 |
| | 16ga | 304ss | 1-7/16" | 345 | 306 | 276 | 230 |
| | 14ga | 316ss | 1-7/16" | 414 | 367 | 331 | 276 |
| **3 hole 1-5/8"** | 13ga | HRPO | 1-1/8" | 375 | 334 | 300 | 250 |
| | 11ga | HRPO | 1-1/8" | 474 | 422 | 379 | 316 |
| | .125" | Alum | 1-1/8" | 337 | 299 | 269 | 224 |
| | 16ga | 304ss | 1-1/8" | 260 | 231 | 208 | nr |
| | 14ga | 316ss | 1-1/8" | 312 | 277 | 250 | 222 |
| **4 hole 2-1/4"** | 13ga | HRPO | 1-1/2" | 862 | 766 | 689 | 574 |
| | 11ga | HRPO | 1-1/2" | 1138 | 1012 | 911 | 759 |
| | .125" | Alum | 1-1/2" | 810 | 720 | 649 | 540 |
| | 16ga | 304ss | 1-1/2" | 580 | 516 | 464 | 387 |
| | 14ga | 316ss | 1-1/2" | 696 | 619 | 557 | 464 |

Loads and deflections are theoretical and based on static loading.
Ladder rung supplied at 60" lengths. Customs lengths and coping upon request.

NAAMM MEMBER

# NOTES

ACCURATE
SCREEN + GRATING
Products with holes, backed with solid service

**CALGARY**
**Head Office**
**877-857-0323**

**VANCOUVER**
**877-687-8805**

**TORONTO**
**877-564-3381**

**MONTREAL**
**855-325-3826**

**EDMONTON**
**877-857-0323**

Proudly Canadian
Serving
North America
since 2001

© 2015 Accurate Screen and Grating Ltd.